LEITZ-Micromanipulator

ERNST LEITZ GMBH WETZLAR

520-8c/Engl.

Leitz Micromanipulator

Fig. 1 Micromanipulator with LABORLUX II® microscope

® = Registered Trade Mark

Single lever operation for the fine adjustment of the microinstruments in two co-ordinates: – Every point in the microscope field of view is reached reliably and without delay even under high magnification.

- Continuous fine adjustment of the single lever operation for gear ratios between 1: $^1/_{16}$ to 1: $^1/_{800}$
- The freedom of movement of the micro-instruments is limited to the microscopic field of view for any magnification.
- Special operating element for the vertical adjustment of the microinstruments.
- The micromanipulator can be inclined at 15°.

Micromanipulator

The continuing advance of scientific research increasingly calls for the initiation or control of certain physiological, chemical, or physical processes within the limits of the microscopical field of view. Since object and operating space are minute and the instruments very delicate, even the practised experimenter will not be able to work without special mechanical aids for the reliable manipulation of his operating instruments during his micro-operations. Efficient micromanipulators were already suggested and indeed built during the last century. In the early days, screw-spindle drives were preferred which, however, were subject to a certain amount of play after prolonged use. In view of the small dimensions of biological subjects exact micro-operations were still out of the question. Even when these screw-spindle drives were opposed by counter-spring mechanisms a residual amount of backlash could not be entirely eliminated. A completely new method of design had to be found in order to reduce it to a negligible value.

The LEITZ Micromanipulator represents an ingenious combination of lever and sliding-bar elements. This design makes it possible to control the movements of the micro-instruments with extreme precision in two coordinates by means of a single guide lever: – Straight-line movements of the guide lever are reproduced as straight-line movements of the micro-instru-

Picture on title page: –
Egg of snail (Planorbis corneus) in the operating field of the micromanipulator.
Objective 25/0.50,
periplanatic eyepiece 10 x, ⅓ x MIKAS.
Dr. Walter,
Micro-Laboratory,
LEITZ Works.

ments exactly and without delay. Effect on the guidance and its reliability by, e.g., vibrations of the hand, or a settling of the tip of the instrument, is completely eliminated. Each point within the microscope field of view is reached without delay even under the highest magnification. By tilting the manipulator the plane of movement of the micro-instruments can be inclined 15° downwards. This is of great advantage with manipulations on large biological or medical objects. It is extremely important in many cases of micro-surgery for the micro-instrument to remain within the field of view of the microscope irrespective of the position of the guide lever even under the highest magnifications. For this purpose the LEITZ micromanipulator has been equipped with a continuous fine adjustment of the gear ratio from $1:{}^{1}/_{16}$ to $1:{}^{1}/_{800}$. Thus, the limits of movement within the microscope field of view can be varied from the smallest fractions of a millimetre to about 5mm. The limits of movement of the hand remain the same with all magnifications. The gear ratio can be adjusted before manipulation.
The vertical adjustment has been deliberately assigned to a separate fine drive, since experience has shown that simultaneous movements in all three coordinates present considerable difficulties to the experimenter.
An additional vertical adjustment is available independently.
There is provision of coarse orientation of the instrument collars in addition to the three-dimensional fine adjustment and their corresponding coarse drives. The LEITZ LABORLUX microscope with built-in light source, rigid stage and interchangeable eyepiece tubes for monocular and binocular observation as well as photomicrography is used as a special stand. All normal methods of investigation, such as brightfield, darkfield and phase contrast, can be carried out. In order to utilize the advantages of stereoscopic vision, a binocular stereomicroscope will be preferable with low to medium magnifications; in addition to plastic viewing, it offers a right-way-round image.

Micro-instruments for the micromanipulator

In practice, all micro-instruments* will be made by the research worker himself. The LEITZ Needle-Drawing-Apparatus after Du Bois is most suitable for producing extremely fine needles and capillary tubes.
The micro-instruments are easily and quickly interchanged on the micromanipulator. They can be adjusted around the object in any desired direction. By combining two micro-instruments scissor- and pincer movements can be carried out.

Operating space

A micro-chamber is needed for work with the micromanipulator on living objects; as a "moist chamber" it prevents excessive evaporation and therefore the drying out of the living specimen. If the micro-chamber is filled with oil the hanging drop will be spread as flat as possible and an unfavourable lens effect largely eliminated. Many objects require a completely sterile procedure. In order to meet this demand it is recommended to keep the entire micromanipulator including the microscope under a plexiglass cover with only the microscope tube protruding through the top of this protective device. Access for the hands is provided by two special openings fitted with sleeves. (cf. SEIDEL, F., Der Mikromanipulator und seine Hilfsgeräte, in H. FREUND: Handbuch der Mikroskopie in der Technik Vol. 1, Pt. 1, 1957.)

Fields of Application

It is impossible to list every single one of its special uses. The continuing progress in the development of its accessories also precludes a final answer at this stage to the question of the various applications of the micromanipulator. From the abundance of possibilities the following are particularly noteworthy: –

In Biology and Medicine

Isolation of single cells
Growing of bacterial and tissue cultures
Controlled removal of cells from embryos
Injection of active substances into cells or tissues
Controlled removal of cell constituents (cancer research)
Artificial fertilization (breeding)
Determination of physical and electro-chemical quantities in living cells

In Technology

Investigations of raw material structure
Production of ultra-fine scales and drill holes
Mounting of the most delicate instrument parts, e.g. in transistor assembly

In Metallurgy and Ore Research

Orientation of the most minute particles, e.g. of metal splinters or minerals for electron-photomicrography
Analysis of metallic deposits

* The micro-forge developed by Fonbrune and manufactured by Messrs. Beaudouin is recommended for the making of special instruments.

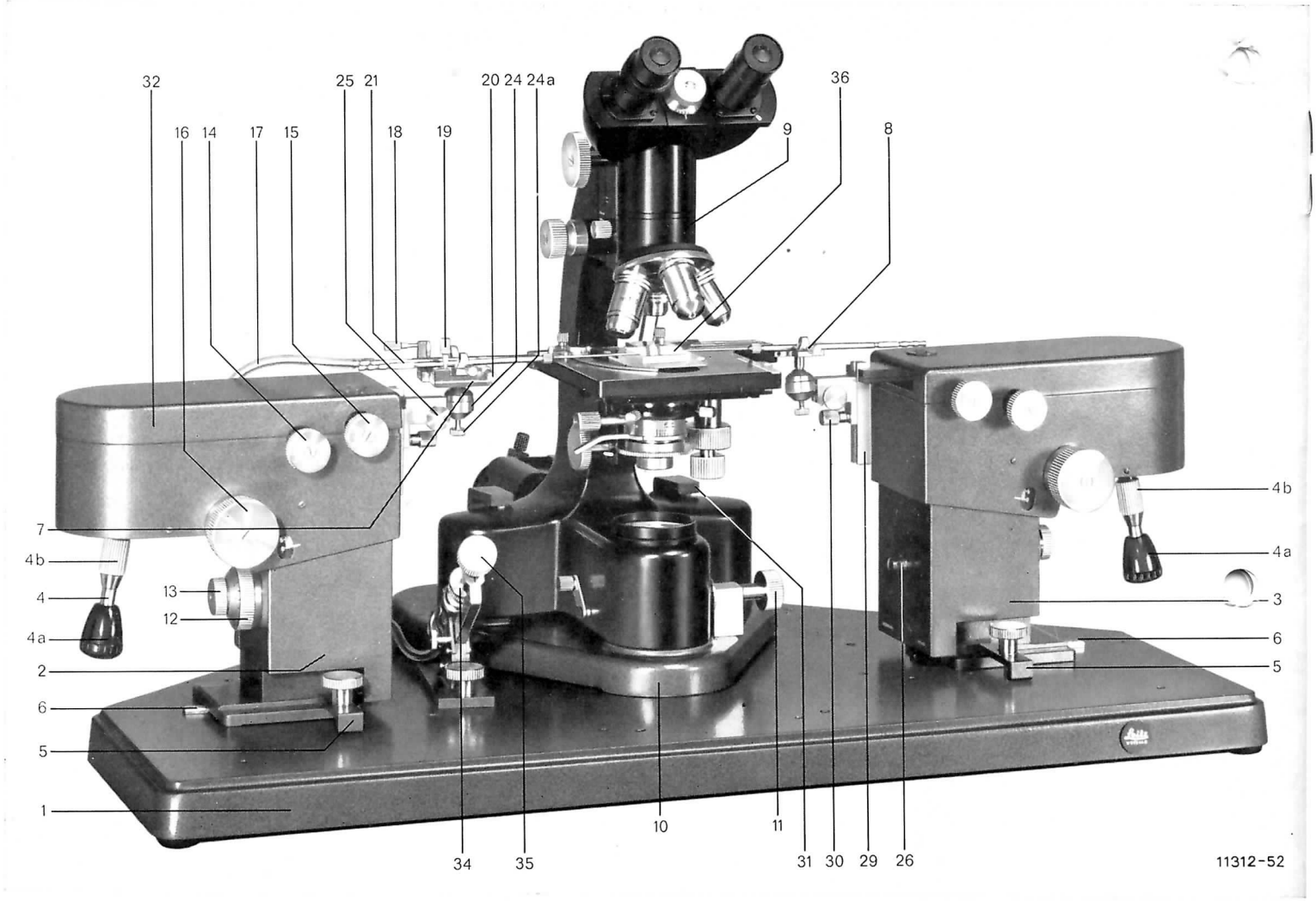

Technical details (Fig. 2)

1 Base plate
2 Left manipulator
3 Right manipulator
4 Guide lever for all manipulator fine adjustments in two coordinates
4a Setting knob for the gear ratio "Hand movement to instrument movement"
4b Milled knob for clamping 4a
5 Manipulator clamps
6 Manipulator locating bars
7 Double instrument holder
8 Single instrument holder
9 ®LABORLUX II microscope with built-in light source and fixed stage
10 Intermediate plate for the microscope
11 Remote control for the microscope fine adjustment
12 Coarse drive for the vertical motion of the micromanipulator
13 Fine drive for the vertical motion of the micromanipulator
14 Milled knob for the transverse motion of the instrument holder
15 Milled knob for the sagittal motion of the instrument holder
16 Knob for tilting the manipulator (15°)
17 Plastic tube
18 Drive of the back instrument collar in the sagittal direction
19 Drive of the front instrument collar for vertical rotation
20 Drive of the front instrument collar for transverse rotation
21 Instrument collars a) back, b) front (see also Fig. 6)
22 Spring clamp with screw for instrument collar
23 Captive nut for clamping the micro-instruments
24 Ball joints for instrument holders
24a Clamping screw for the ball joint of the instrument holder
25 Clamping screw for the instrument holder
26 Capstan-head screw for mounting the micromanipulator
27 Micro-Instruments
28 Spherical cap for the transmission of the horizontal motions (see Fig. 7)
29 Dovetail guide for the vertical adjustment of the double instrument holder
30 Clamping screw for 29
31 Microscope clamps
32 Removable cap (covering the spherical cap 28)
33 Threeway cock (invisible in this illustration)
34 Injection syringe
35 Micrometer screw for the injection syringe
36 Culture chamber (moist chamber, oil chamber)

The components not referred to in Fig. 2 are described in detail in Fig. 6 under identical numbers.

Technical description

Arrangement

The micromanipulator consists of the observation microscope and the manipulator instrument with left and right manipulator units, whose basic design is identical. The LABORLUX II or a stereoscopic microscope can be used as a stand. Micromanipulator and microscope are mounted on a common base plate. It is the basic feature of the design to leave the micro-surgeon a hand as free as possible in the choice of his experimental conditions. As a result, the experimenter may use a micromanipulator on the right or on the left, or one each on both sides according to requirements or his own preference.

Operating elements

The guide lever 4 is the most important operating element in micromanipulation; it actuates the fine adjustments of the micro-instruments in two coordinates. The setting knob 4 a serves for the adjustment to the field of view set in the microscope, and with it the gear ration between hand movement and instrument movement can be continuously determined between $1:{}^{1}/_{16}$ and $1:{}^{1}/_{600}$. This gear ratio can be fixed by means of the milled knob 4 b, in order, to exclude accidental changes during micromanipulation. The vertical adjustment is controlled by a separate coarse and fine drive, which is arranged so that it can be operated simultaneously, if necessary, with the guide lever for the horizontal movement. Figs. 5 and 6 demonstrate the various and partly overlapping possibilities of adjustment.

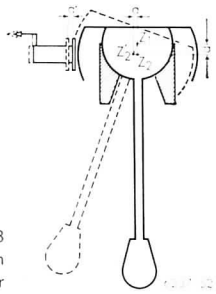

Fig. 3
Function
of the guide lever

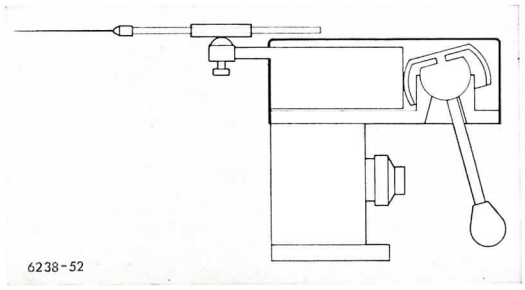

Fig. 4

The lever for the horizontal movement ends in the centre Z_1 of the inner metal sphere, over which a spherical cap with the centre Z_2 has been placed. By means of 4 a the centres of both spheres can be moved relative to each other, whereby a lever arm is formed so that the slide bar is displaced through the distance a = a′ if the handle is moved up to the dotted line (angle $Z_2\,Z_1\,Z_2$).

The various movements of the micromanipulator and the instrument holder

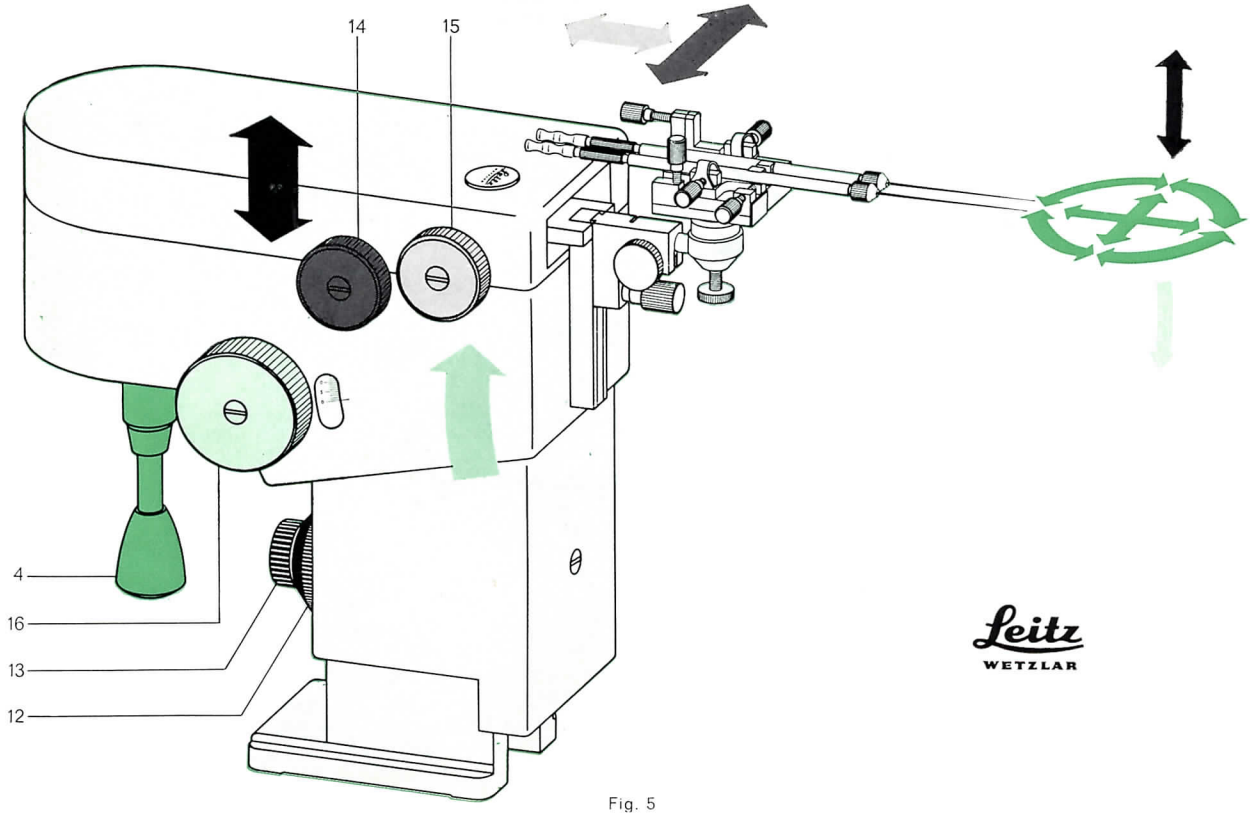

Fig. 5

The various movements of the instrument collars alone

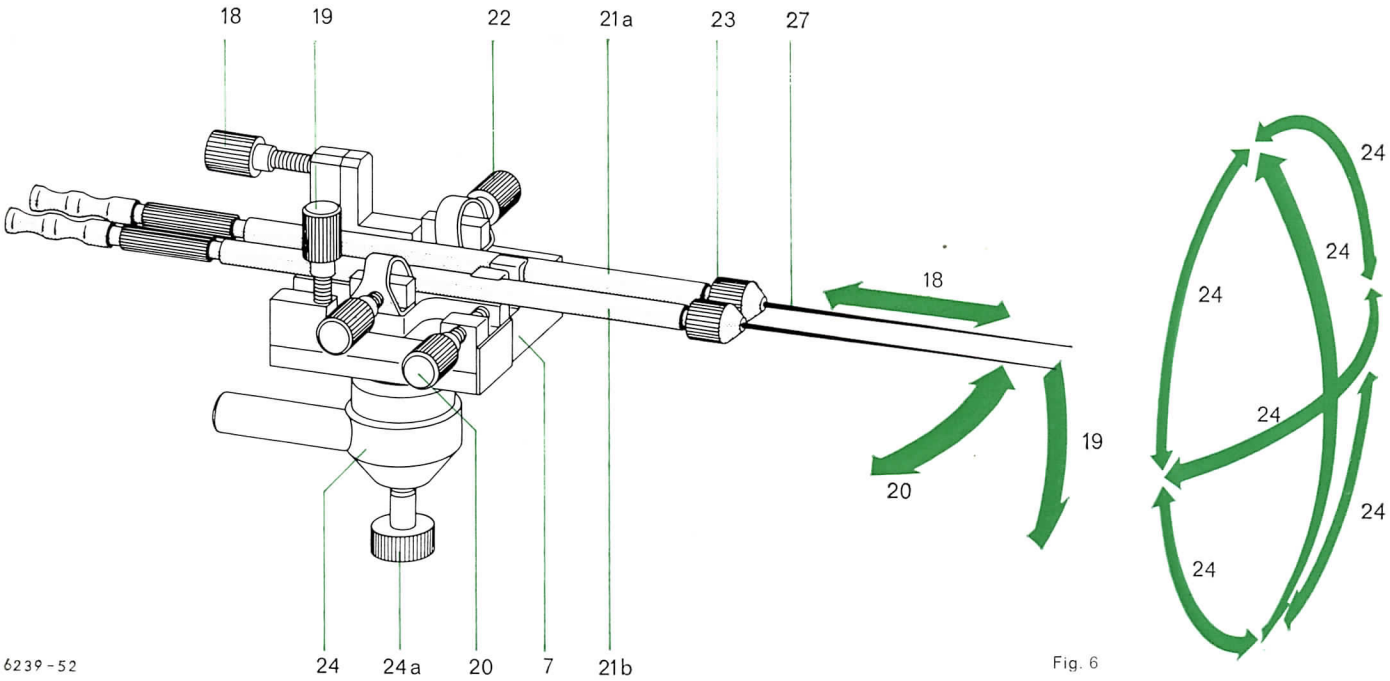

Fig. 6

Instrument holders

The micro-instruments are attached to the instrument holders. Fig. 6 shows a double, Fig. 1 left a single instrument holder.

The micro-instruments 27 are held in the instrument collars 21 and firmly gripped in the collars by means of the captive nuts 23. The instrument collars are mounted on the instrument holders with the spring clamps 22. The double instrument holder incorporates various devices for moving the two micro-instruments, while the single instrument holder accommodates one instrument collar only. After loosening the screws 30, both instrument holders can be vertically adjusted along a dovetail guide or, if necessary, removed from the manipulators altogether. A ball joint, which can be clamped by 24 a, allows adjustments of the instrument in all directions before manipulation.

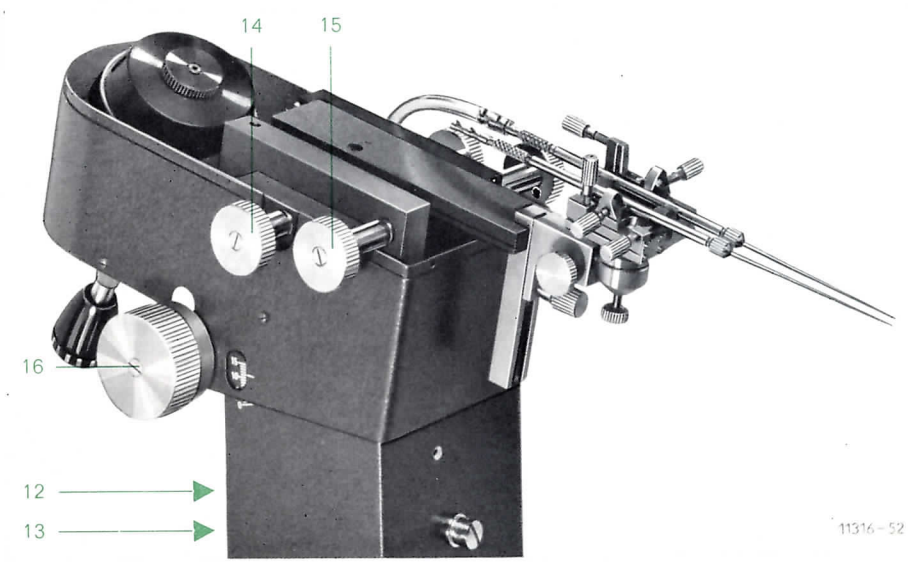

Fig. 7

Fig. 7 shows the micromanipulator with the cover removed. On the extreme left the spherical cap with its flattened top can be recognized covering the inner metal sphere (not shown in illustration). The movement of the guide lever is transferred from here directly to the instrument holder and thus to the micro-instruments. The drive knobs 14 and 15 for the transverse and the sagittal movements, too, act on the instrument holder, while the milled knobs 16 and 12/13 actuate the entire top part of the manipulator. The instrument holder can be vertically adjusted in a dovetail guide independent of the vertical adjustment 12/13. The numbering in the text is based on that in Fig. 2.

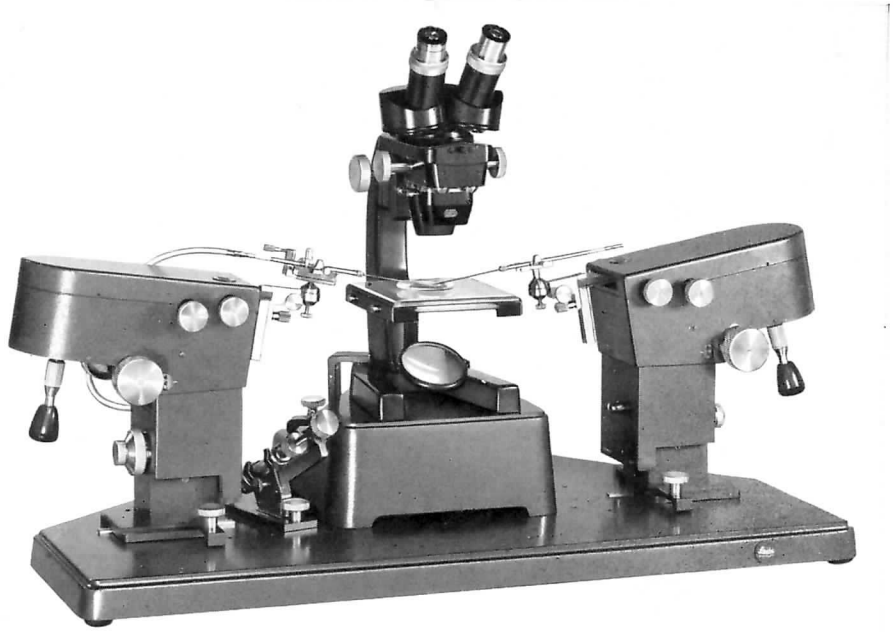

11313-52

Fig. 8 Micromanipulator with stereomicroscope

Microscope stands and optical equipment

For work with the micromanipulator a stand with a fixed stage and tube focusing is preferable. Therefore, the LABORLUX II microscope stand is particularly recommended for use with the micromanipulator. At magnifications up to 200 x a stereoscopic binocular microscope can offer special advantages, one of which is the convenience of a right-way-round image. All microscopes are vertically adjusted to the micromanipulator by means of spacing plates.
Stands with stage focusing and fixed tubes can also be used with the micromanipulator, but here the sequence of the necessary movements, which have to be mutually adjusted, must be strictly adhered to.
Any normal microscope objective is suitable for brightfield observation. The increase in the field of view through the use of the LEITZ plano objectives together with the widefield eyepieces has proved to be particularly valuable in micromanipulation.

The use of the micromanipulator in phase contrast and darkfield microscopy demands an effective control of the refractive conditions in the optical train. This is achieved mainly by the introduction of the oil chamber, where due to the flat spread of the hanging drop above the oil film optical interference with the phase contrast condition can be largely avoided. The nodal distance of the LEITZ phase contrast condenser is sufficient to allow the use of culture chambers up to a height of 7mm. In addition to the Pv 10/0.25, Pv 25/0.50, Pv Apo L 40/0.70 and Pv Apo L 63/0.70 phase contrast objectives, the Pv Ol 70/1.15 phase contrast objective with a numerical aperture of 1.15 is specially recommended for use with the micromanipulator. Darkfield observations in a culture chamber with normal objectives are possible with the Heine condenser up to an objective numerical aperture of 0.70.

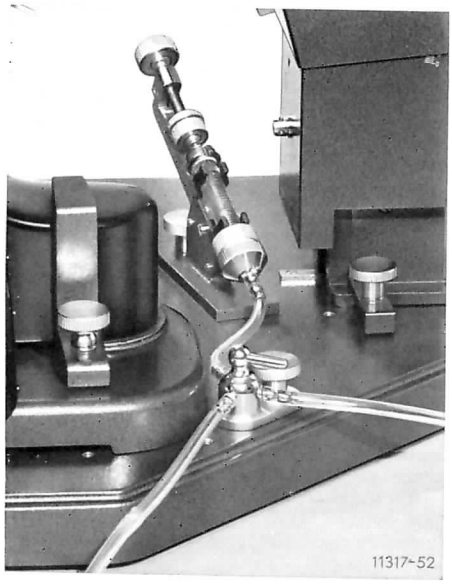

11317-52

Leitz
WETZLAR

Injecting device (Fig. 9)

For operations, and where micropipettes are used, a mouth pipette, or, better still, the injecting device (see Fig. 9) can be connected to the hollow needle inserted by the observer. It consists of a holder with attached screw control for regulating the supply of the syringe, supply tubes of flexible, transparent plastic material leading to the needle holder, and a threeway cock.

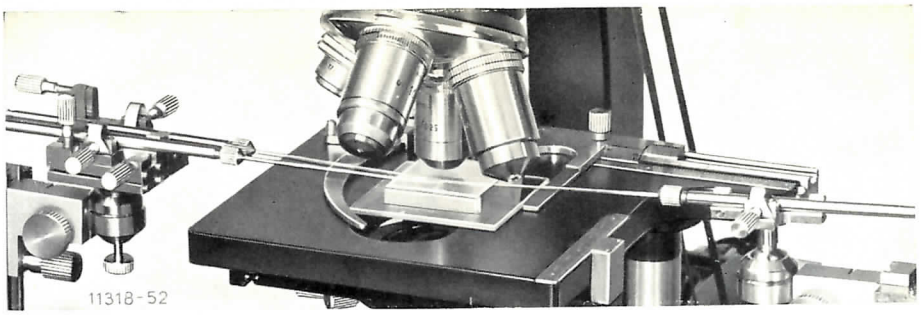

Fig. 10

Culture chamber

A culture chamber is necessary for examinations in transmitted (more rarely in incident) light under high power, above all during operations on living cells. (See Fig. 10). This culture chamber consists of a plane-parallel glass plate with two glass strips cemented on to it at a distance of 33mm from each other; on these the cover glass (30 x 30mm) is placed. The culture chamber has a total height of 7mm and is available with internal heights of 3 or 5mm.

Micro-instruments

Fig. 11

The micro-instruments controlled under the microscope by means of the micromanipulator can be of the most varied shapes and have the most diverse functions depending on the preparations under investigation. During work on living cells, for instance, the research worker can remove whole or parts of the nucleus, or other cell constituents from individual cells and replace them by others with the aid of microneedles, microscalpels, micropipettes, and microforceps. Also, certain chemical substances can be introduced into a cell by means of microinjections, in addition, measurements are possible of differences in the potentials across very short distances, such as between the poles of a cell, by the insertion of certain instruments. Most micro-instruments are made by the user himself according to practical experience and instructions. The Needle Drawing Apparatus after Du Bois has proved particularly successful as an accessory for producing microneedles.

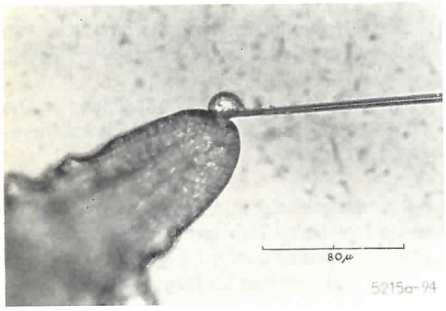

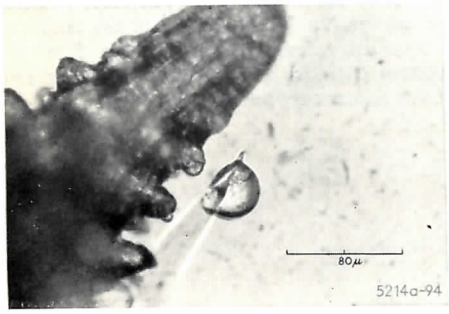

Fig. 12 (top)
Lifting the growing tip of Helodea Canadensis. External diameter of the instrument tip 3 μ.

Fig. 13 (bottom)
Removal of protoplasm from an acrospire of Helodea Canadensis. Hook needle, diameter of tip approx. 2 μ.

Literature

Erskine, C. A.	Micromanipulation in Control and Handling of Zygiella x-notata as an Experimental Animal. Science **133**/3453, S. 644–646 (1961).
Fonbrune, P. de	Technique de Micromanipulation. Ed. Masson et Cie, Paris (1949).
Otto, L.	Der Mikromanipulator und seine Hilfsgeräte. VEB Verlag Technik/Berlin (1954).
Schlote, F. W.	Zellforschung mit Elektronenmikroskop und Mikromanipulator. LEITZ-Mitteilg. I 2, S. 42 bis 46 (1959).
Seidel, F.	Bauweise und Verwendung von Mikromanipulatoren, in H. FREUND, Handbuch der Mikroskopie in der Technik, Bd. I, Teil 1, S. 590–613. Umschau-Verlag, Frankfurt/M., (1957).
Ullrich, K. I. und K. Thurau	Technische Hilfsmittel bei der Funktion von Nierentubuli und Blutpillaren. LEITZ-Mitteilg. II/3, S. 85–88 (1962).
Walter, F.	Der LEITZ-Mikromanipulator – ein Feinwerkzeug des Mikroskopikers, Feinwerktechnik **66**/11, S. 407–411 (1962).

We reserve the right to alter construction and design.

ERNST LEITZ GMBH WETZLAR GERMANY

Subsidiary: Ernst Leitz (Canada) Ltd., Midland, Ontario

Printed in Germany

VI/66/LX/SD

List 520-8c/Engl.